Art.Nr.: V20117
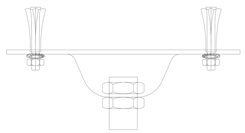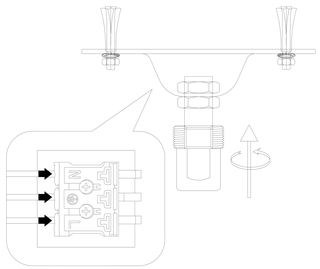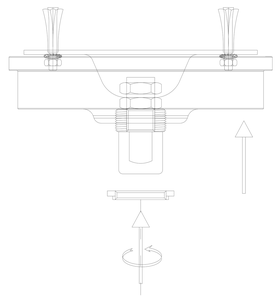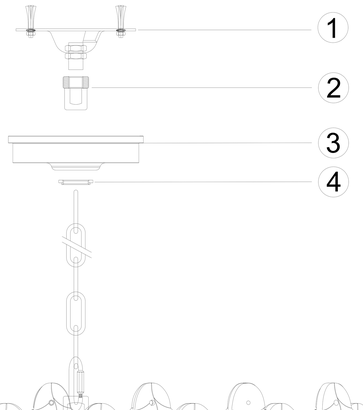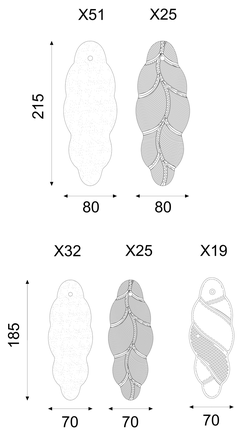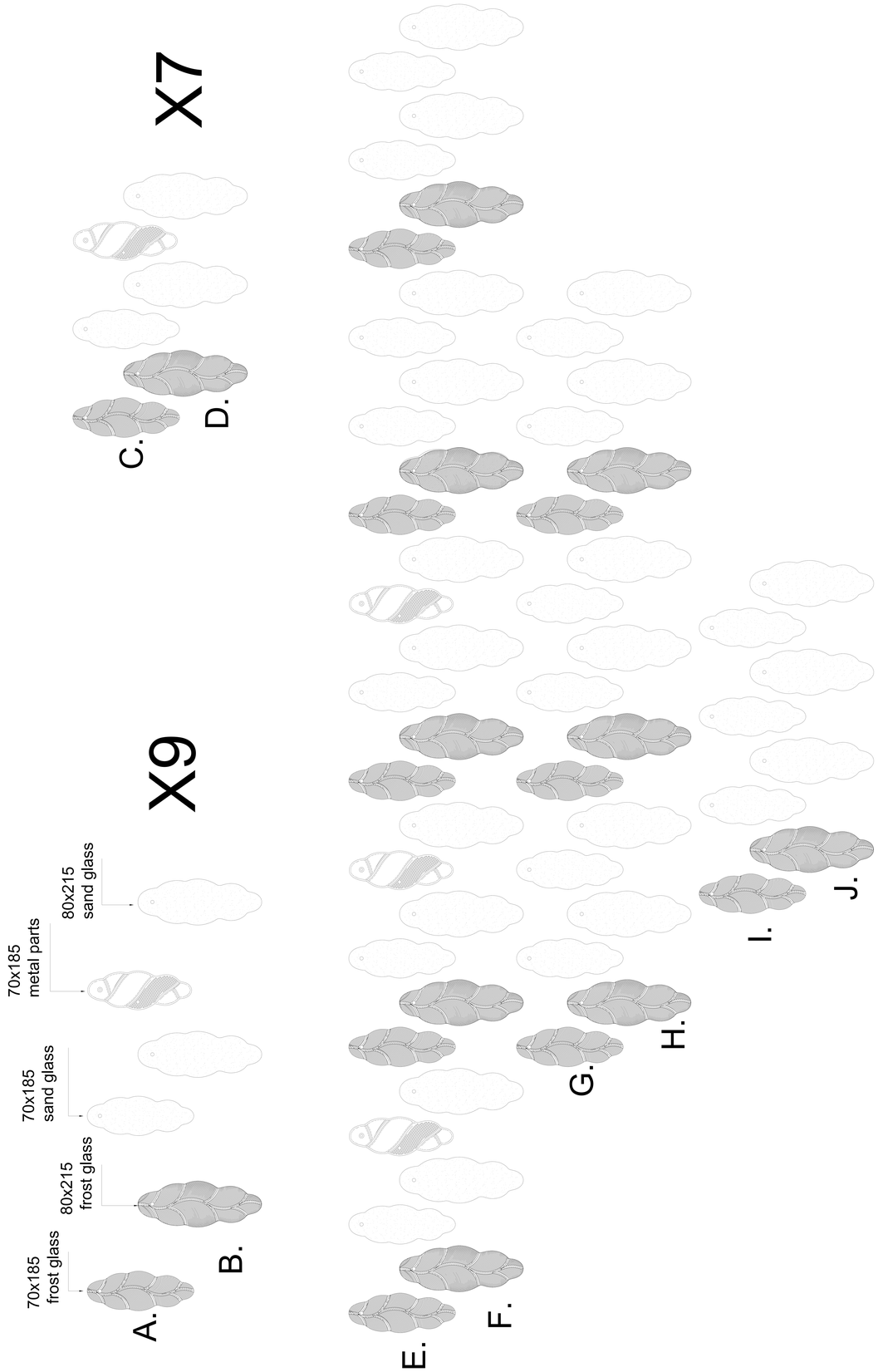
max.37x40W (G9)